USER MANUAL

MODEL:

DS Vision® Digital
HD Digital Distribution System

P/N: 2900-300283 Rev 2

Contents

Figures

1 Introduction

Welcome to Kramer Electronics! Since 1981, Kramer Electronics has been providing a world of unique, creative, and affordable solutions to the vast range of problems that confront video, audio, presentation, and broadcasting professionals on a daily basis. In recent years, we have redesigned and upgraded most of our line, making the best even better!

Our 1,000-plus different models now appear in 14 groups that are clearly defined by function: GROUP 1: Distribution Amplifiers; GROUP 2: Switchers and Routers; GROUP 3: Control Systems; GROUP 4: Format/Standards Converters; GROUP 5: Range Extenders and Repeaters; GROUP 6: Specialty AV Products; GROUP 7: Scan Converters and Scalers; GROUP 8: Cables and Connectors; GROUP 9: Room Connectivity; GROUP 10: Accessories and Rack Adapters; GROUP 11: Sierra Video Products; GROUP 12: Digital Signage; GROUP 13: Audio; and GROUP 14: Collaboration.

Congratulations on purchasing your Kramer **DS** Vision® Digital *HD* Digital Distribution System, which is ideal for the following typical applications:

- Digital signage
- Media distribution

2 Getting Started

We recommend that you:

- Unpack the equipment carefully and save the original box and packaging materials for possible future shipment
- Review the contents of this user manual
- Ensure that the player and the screens are compatible. Check that they work together before connecting the **DS Vision Digital** system.

Go to http://www.kramerelectronics.com/support/product_downloads.asp to check for up-to-date user manuals, application programs, and to check if firmware upgrades are available (where appropriate).

2.1 Achieving the Best Performance

To achieve the best performance:

- Use only good quality connection cables (we recommend Kramer high-performance, high-resolution cables) to avoid interference, deterioration in signal quality due to poor matching, and elevated noise levels (often associated with low quality cables)
- Do not secure the cables in tight bundles or roll the slack into tight coils
- Avoid interference from neighboring electrical appliances that may adversely influence signal quality
- Position your Kramer **DS Vision® Digital** away from moisture, excessive sunlight and dust

This equipment is to be used only inside a building. It may only be connected to other equipment that is installed inside a building.

2.2 Safety Instructions

Caution: There are no operator serviceable parts inside the unit

Warning: Use only the Kramer Electronics input power wall adapter that is provided with the unit

Warning: Disconnect the power and unplug the unit from the wall before installing

2.3 Recycling Kramer Products

The Waste Electrical and Electronic Equipment (WEEE) Directive 2002/96/EC aims to reduce the amount of WEEE sent for disposal to landfill or incineration by requiring it to be collected and recycled. To comply with the WEEE Directive, Kramer Electronics has made arrangements with the European Advanced Recycling Network (EARN) and will cover any costs of treatment, recycling and recovery of waste Kramer Electronics branded equipment on arrival at the EARN facility. For details of Kramer's recycling arrangements in your particular country go to our recycling pages at *http://www.kramerelectronics.com/support/recycling/*.

3 Overview

DS Vision® Digital is a high-definition (HD) digital distribution system that delivers real-time digital, non-compressed content to digital signage terminals up to 200m (660ft) away. **DS Vision® Digital** enables you to manage digital signage assets.

The **DS Vision® Digital** system offers the following high-level capabilities:

- Media distribution
- Display serial control
- Terminal IP connectivity
- Scalability

3.1 Defining the DS Vision® Digital HD Digital Distribution System

This section defines the **DS Vision® Digital** system.

The system includes a:

- Transmitter (see Section 3.1.1)
- Broadcaster (see Section 3.1.2)
- Receiver (see Section 3.1.3)

This table defines the models:

Kramer Model	Kramer Part Number	Full Description
DSVD-T (0VS60012)	50-0000609011	Minicom DS Vision Digital Transmitter
DSVD-B (0VS60011)	50-0000599011	Minicom DS Vision Digital Broadcaster 3-ports
DSVD-R (0VS60010)	50-0000589011	Minicom DS Vision Digital Receiver

3.1.1 The DS Vision® Digital Transmitter

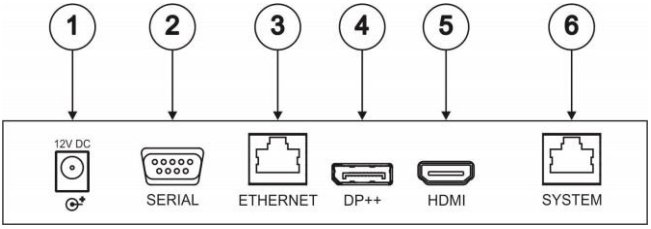

Figure 1: DS Vision® Digital Transmitter

#	Feature	Function
1	*12V DC POWER* Connector	Connects to the 12V DC power adapter
2	*SERIAL* 9-pin D-sub Connector	Serial extension for terminal control
3	*ETHERNET* RJ-45 Connector	IP extension
4	*DP* Connector	DP++ player connection
5	*HDMI* Connector	HDMI player connection
6	*SYSTEM* RJ-45 Connector	System cable to receiver

3.1.2 The DS Vision® Digital Broadcaster

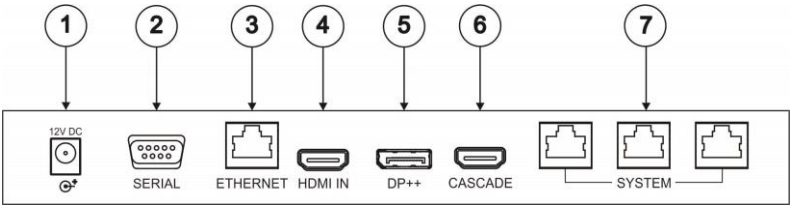

Figure 2: DS Vision® Digital Broadcaster

#	Feature	Function
1	*12V DC POWER* Connector	Connects to the 12V DC power adapter
2	*SERIAL* 9-pin D-sub Connector	Serial extension for terminal control
3	*ETHERNET* RJ-45 Connector	IP extension
4	*HDMI* Connector	HDMI player connection
5	*DP* Connector	DP++ player connection
6	CASCADE/Local	For cascading units or local display connection
7	*SYSTEM* RJ-45 Connector	System cable to receivers (up to three)

3.1.3 The DS Vision® Digital Receiver

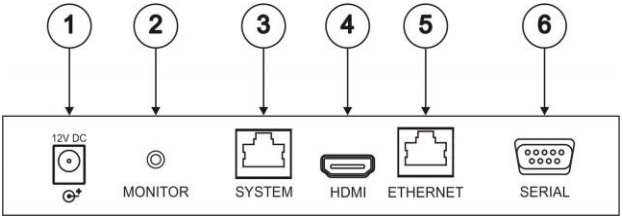

Figure 3: DS Vision® Digital Receiver

#	Feature	Function
1	*12V DC POWER* Connector	Connects to the 12V DC power adapter
2	*MONITOR* 3.5mm Mini Jack	Not used
3	*SYSTEM* RJ-45 Connector	System cable from transmitter
4	*HDMI* Connector	HDMI display connection
5	*ETHERNET* RJ-45 Connector	IP connectivity to display and/or peripherals
6	*SERIAL* 9-pin D-sub Connector	Display control

4 Connecting the DS Vision® Digital

Always switch off the power to each device before connecting it to your **DS Vision® Digital**. After connecting your **DS Vision® Digital**, connect its power and then switch on the power to each device.

4.1 Connecting the Player and the Screen

To connect the player to a screen, as Figure 4 illustrates, do the following:

1. Connect the player to the broadcaster/transmitter HDMI port using an HDMI to HDMI cable (type A, male/male) **or** connect a DP cable to the DP port (DisplayPort male, male).

2. Connect the screen to the receiver HDMI port using an HDMI to HDMI cable (type A, male/male).

3. Connect the system cable up to 100m (330ft) to the SYSTEM port of the broadcaster/transmitter and the SYSTEM port of the receiver.

4. With the power supplies provided, connect the DC power adapters to the broadcaster/transmitter and receiver. Plug the power supplies into the mains electricity.

Once connected, the system is ready to transmit the video and audio signals.

5 Media Distribution

The **DS Vision Digital** system can distribute HD digital media from a single player to:

- A single display located 100m (330ft) away, using the transmitter
- Three displays located 100m (330ft) away, and one local display, using the broadcaster

Figure 4 illustrates the configuration for media distribution to a single display:

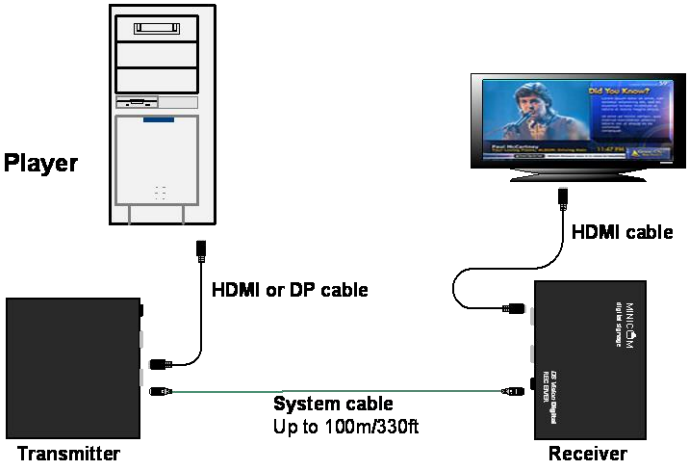

Figure 4: Media Distribution to a Single Display

Figure 5 illustrates the configuration for media distribution to three displays:

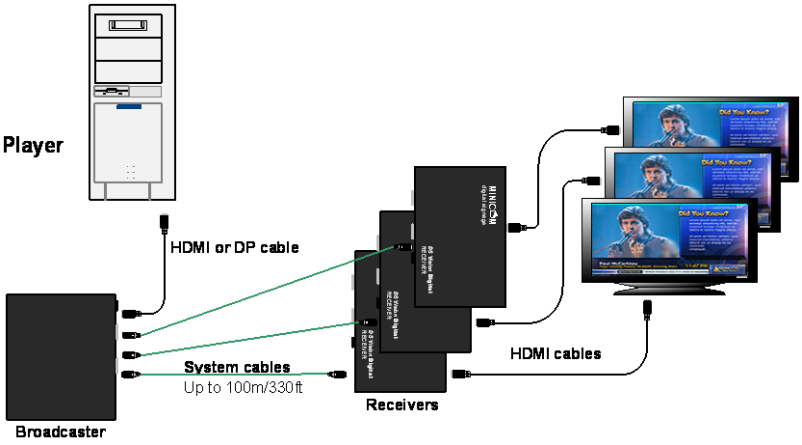

Figure 5: Media Distribution to Three Displays

Note! The connections to the transmitter and the broadcaster are identical. The broadcaster has three system ports and the transmitter has only one system port. All references to connections apply equally to both units.

Figure 6 and Figure 7 illustrate all the connections to the **DS Vision Digital** units. Not all the connections are always needed. This section explains the basic connections. Subsequent sections explain the circumstances that require additional connections.

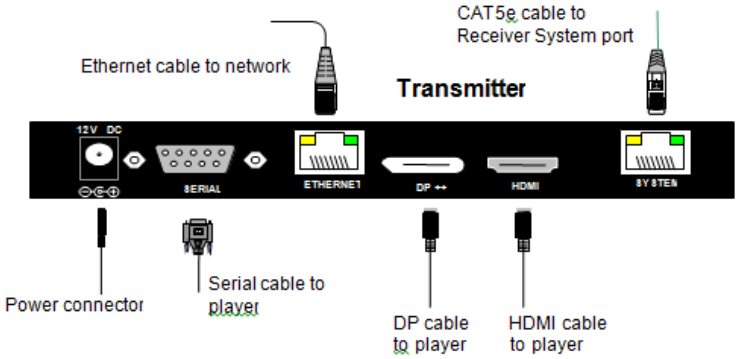

Figure 6: Transmitter Connections

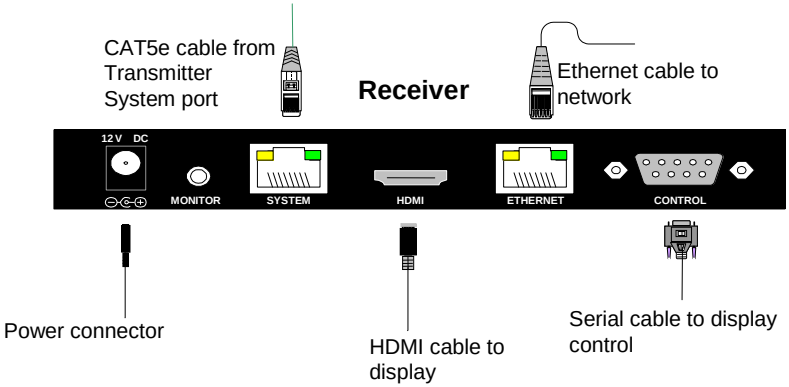

Figure 7: Receiver Connections

5.1 Mounting the Receiver

The receiver units have VESA standard screw holes 100mm (3.9in) apart, as shown in Figure 8. Use two screws supplied with the receiver and monitor to connect the unit to the back of the monitor.

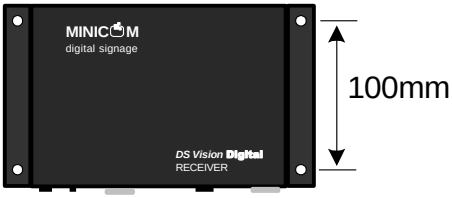

Figure 8: VESA Standard Screw Holes

6 Serial Control

To enable serial control of remote displays:

1. Connect a serial (9-pin D-sub male/female) cable between the players and the broadcaster/transmitter.

2. Connect a serial (9-pin D-sub female/female) cable between the receiver and the screen.

Figure 9 illustrates the connections:

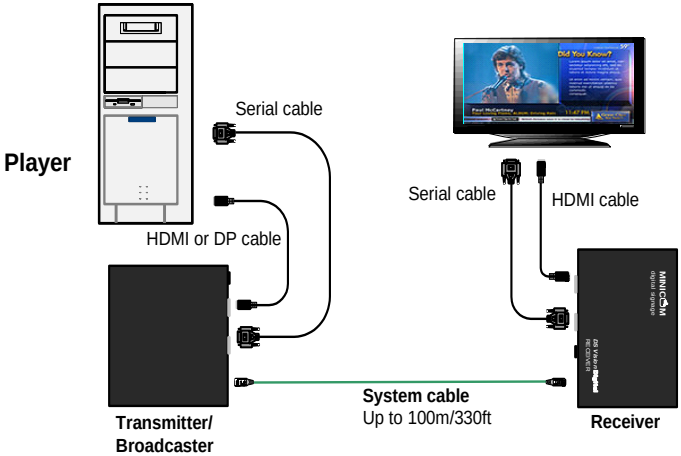

Figure 9: Serial Control

When using a broadcaster, the serial command is broadcasted to all the displays. In order to send a quarry command to a specific display, make sure to place the relevant screen ID in the serial command.

Note! In order to address a specific display, make sure the display supports “ID mode”.

7 Terminal IP Connectivity

To extend a network from the transmitter/broadcaster side to the remote terminal side:

1. Connect a standard Ethernet cable (Ethernet 10/100BaseT straight-through cable) between the player side network and the transmitter/broadcaster.

2. Connect a standard Ethernet cable (Ethernet 10/100BaseT straight-through cable) between the receiver and the terminal side units.

Once these connections have been made, the extension system enables the creation of an extended IP segment.

Figure 10 illustrates the connections to be made:

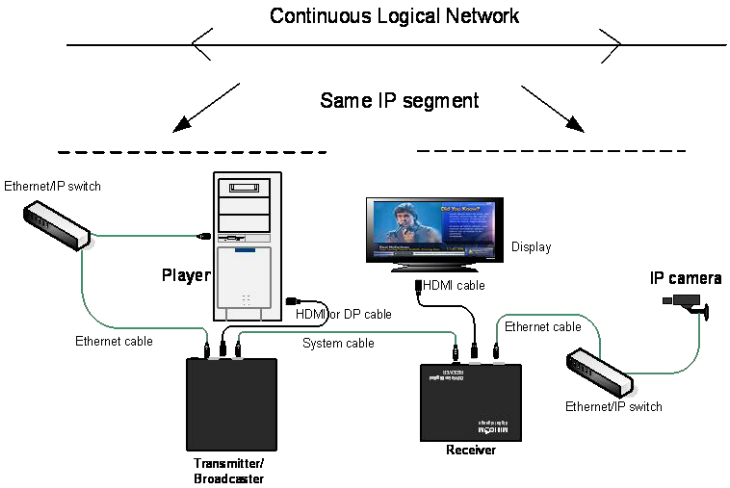

Figure 10: Terminal IP Connectivity

8 Scalability

There are two types of methods to extend the system scale:

- Cascade a receiver with a broadcaster/transmitter to increase the distance of the system
- Cascade a broadcaster with a broadcaster/transmitter to increase the number of supported displays

8.1 Cascading to Increase the Distance

Cascade up to six distribution systems to increase the distance up to 200m (660ft). Figure 11 illustrates a 2-hop cascaded system.

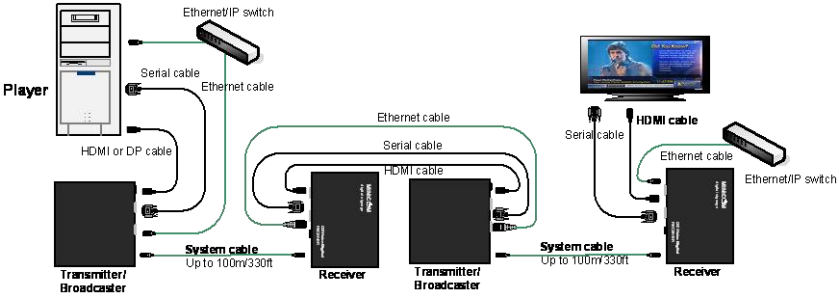

Figure 11: 2-Hop Cascaded System

To connect the receiver to the broadcaster/transmitter, connect the following cables (see Figure 11):

- HDMI to HDMI (type A, male/male)
- For serial control: Serial cable - (9-pin D-sub male/female).
- For IP connectivity: Ethernet/Management cable - Ethernet 10/100BaseT straight-through cable.

Figure 12 illustrates a 6-hop cascaded system up to 200m (660ft).

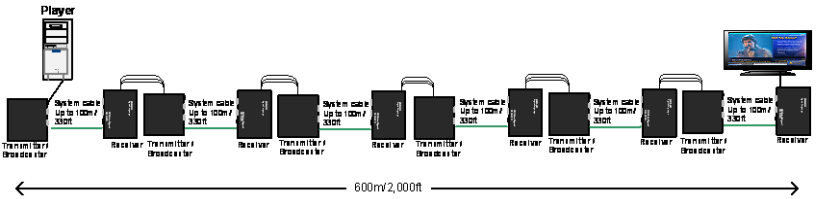

Figure 12: 6-Hop Cascaded System

8.2 Cascading to Increase the Number of Displays

Connect a primary broadcaster to a secondary broadcaster or transmitter to increase the number of receivers and displays that can be connected to the system. Cascading an additional broadcaster enables adding three displays, whereas cascading of an additional transmitter enables adding a single display.

1. Connect the primary broadcaster to a secondary unit using an HDMI to HDMI cable (type A, male/male).

2. Connect the HDMI to HDMI cable (type A, male/male) to the Cascade/Local port of the primary broadcaster and to the HDMI input of a secondary broadcaster or transmitter.

Figure 13 illustrates a primary and secondary cascaded system:

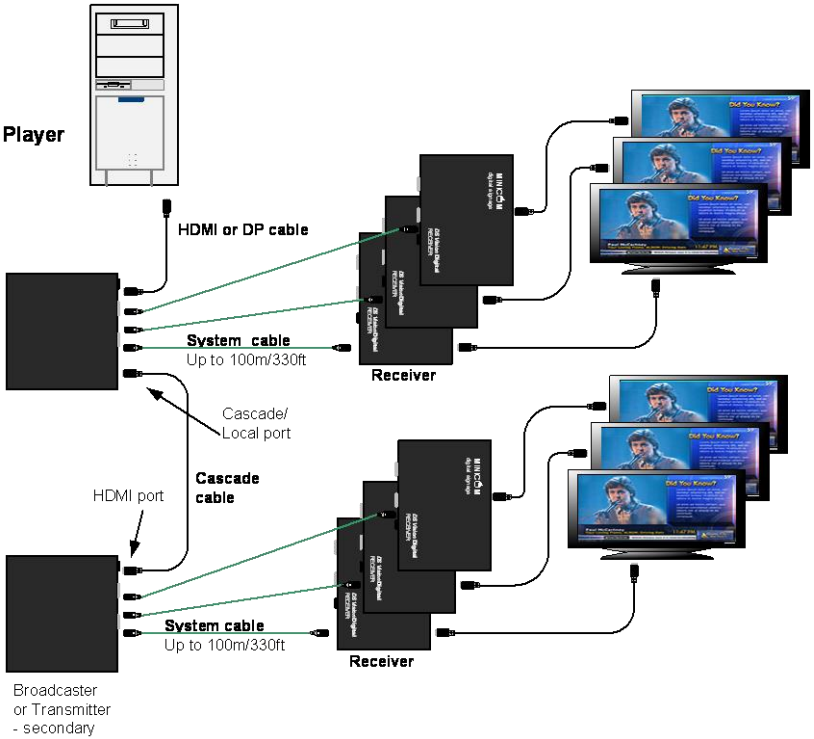

Figure 13: Primary and Secondary Cascaded System

Figure 14 illustrates a system with two cascaded broadcasters and a transmitter, providing four additional displays:

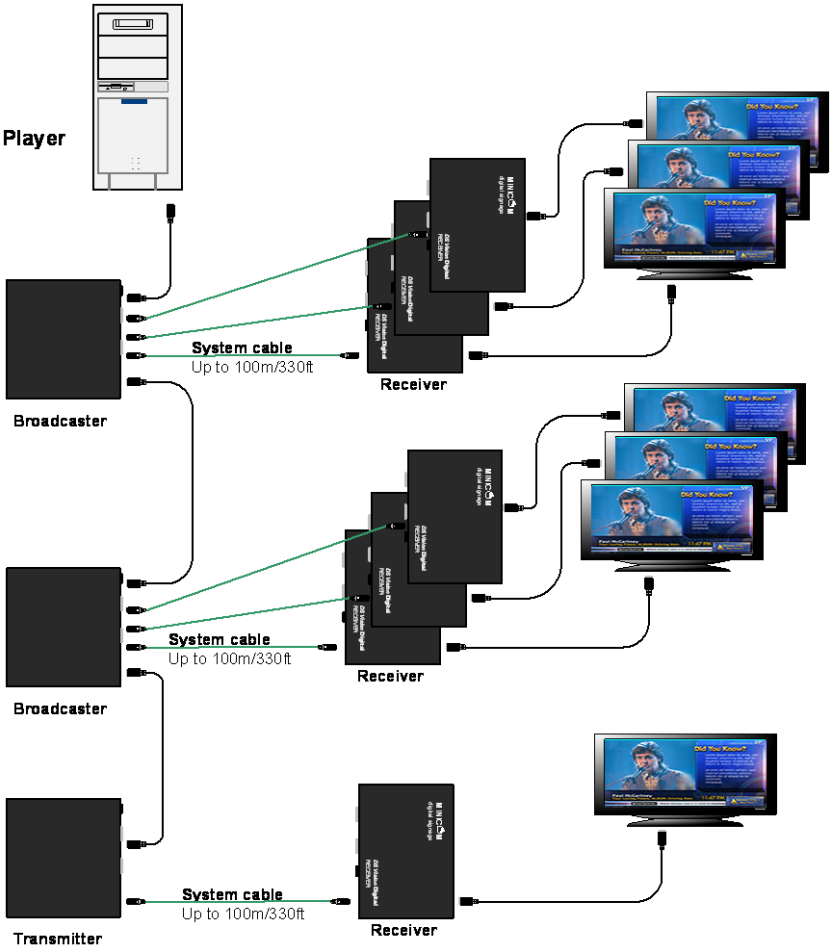

Figure 14: Cascaded Broadcaster and Transmitter

The system can be further scaled to include 16 displays.

Figure 15 illustrates the connection of 16 displays:

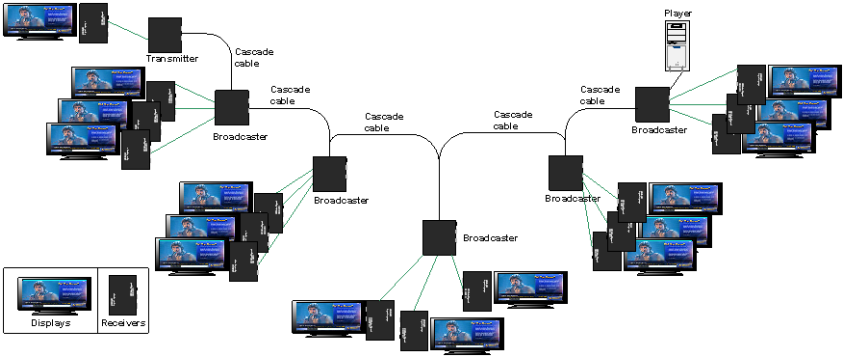

Figure 15: Sixteen Displays

When cascading to increase the distance, connect the receiver to the cascaded transmitter with the RS-232 serial cable. See Figure 11.

9 Technical Specifications

Feature	Item	Broadcaster	Transmitter	Receiver
MAXIMUM RESOLUTION		1080p, 60Hz, 24bit per pixel, uncompressed	1080p, 60Hz, 24bit per pixel, uncompressed	1080p, 60Hz, 24bit per pixel, uncompressed
VIDEO-1	HDMI	HDMI compatible up to 10.2Gbps	HDMI compatible up to 10.2Gbps	HDMI compatible up to 10.2Gbps
VIDEO-2	Display Port	Dual-mode Display Port	Dual-mode Display Port	N/A
AUDIO		HDMI specified	HDMI specified	HDMI specified
CASCADE PORT	HDMI	HDMI compatible up to 10.2Gbps	N/A	N/A
SYSTEM CABLE	Type	CAT5e/CAT6/CAT7 UTP, STP or FTP	CAT5e/CAT6/CAT7 UTP, STP or FTP	CAT5e/CAT6/CAT7 UTP, STP or FTP
	Connector	RJ-45	RJ-45	RJ-45
	Max Length	100m (330ft)	100m (330ft)	100m (330ft)
HDMI	DDC	HDMI standard, 5V	HDMI standard, 5V	HDMI standard, 5V
	Connector	HDMI Type A	HDMI Type A	HDMI Type A
ETHERNET	Port	RJ-45	RJ-45	RJ-45
	Speed	100Mbps	100Mbps	100Mbps
SERIAL/ RS-232	Connector	9-pin D-sub F	9-pin D-sub F	9-pin D-sub M
MONITOR	Connector	N/A	N/A	3.5mm phone jack
POWER	Connector	1.65mm DC power jack, standard polarity	1.65mm DC power jack, standard polarity	1.65mm DC power jack, standard polarity
	Consumption	12w	5w	7w
	Supply	12V/2A	12V/2A	12V/2A
LED		Power, Ethernet, System	Power, Ethernet, System	Ethernet, System
MTBF		400,000hrs	400,000hrs	400,000hrs
OPERATION	Temperature	0° to 40°C (32° to 104°F)	0° to 40°C (32° to 104°F)	0° to 40°C (32° to 104°F)
STORAGE	Temperature	-40° to 85°C (-40° to 185°F)	-40° to 85°C (-40° to 185°F)	-40° to 85°C (-40° to 185°F)
DIMENSIONS	(W. D. H.)	214mm x 140mm x 26mm (8.4" x 5.5" x 1.0")	139mm x 140mm x 40mm (5.5" x 5.5" x 1.6")	190mm x 123mm x 27mm (7.5" x 4.8" x 1.1")
MOUNTING	Compatibility	N/A	N/A	VESA

Specifications are subject to change without notice at http://www.kramerelectronics.com
All nominal levels are at ±10%

LIMITED WARRANTY

The warranty obligations of Kramer Electronics for this product are limited to the terms set forth below:

What is Covered

This limited warranty covers defects in materials and workmanship in this product.

What is Not Covered

This limited warranty does not cover any damage, deterioration or malfunction resulting from any alteration, modification, improper or unreasonable use or maintenance, misuse, abuse, accident, neglect, exposure to excess moisture, fire, improper packing and shipping (such claims must be presented to the carrier), lightning, power surges, or other acts of nature. This limited warranty does not cover any damage, deterioration or malfunction resulting from the installation or removal of this product from any installation, any unauthorized tampering with this product, any repairs attempted by anyone unauthorized by Kramer Electronics to make such repairs, or any other cause which does not relate directly to a defect in materials and/or workmanship of this product. This limited warranty does not cover cartons, equipment enclosures, cables or accessories used in conjunction with this product.

Without limiting any other exclusion herein, Kramer Electronics does not warrant that the product covered hereby, including, without limitation, the technology and/or integrated circuit(s) included in the product, will not become obsolete or that such items are or will remain compatible with any other product or technology with which the product may be used.

How Long Does this Coverage Last

Three years as of this printing; please check our Web site for the most current and accurate warranty information.

Who is Covered

Only the original purchaser of this product is covered under this limited warranty. This limited warranty is not transferable to subsequent purchasers or owners of this product.

What Kramer Electronics will do

Kramer Electronics will, at its sole option, provide one of the following three remedies to whatever extent it shall deem necessary to satisfy a proper claim under this limited warranty:

1. Elect to repair or facilitate the repair of any defective parts within a reasonable period of time, free of any charge for the necessary parts and labor to complete the repair and restore this product to its proper operating condition. Kramer Electronics will also pay the shipping costs necessary to return this product once the repair is complete.
2. Replace this product with a direct replacement or with a similar product deemed by Kramer Electronics to perform substantially the same function as the original product.
3. Issue a refund of the original purchase price less depreciation to be determined based on the age of the product at the time remedy is sought under this limited warranty.

What Kramer Electronics will not do Under This Limited Warranty

If this product is returned to Kramer Electronics or the authorized dealer from which it was purchased or any other party authorized to repair Kramer Electronics products, this product must be insured during shipment, with the insurance and shipping charges prepaid by you. If this product is returned uninsured, you assume all risks of loss or damage during shipment. Kramer Electronics will not be responsible for any costs related to the removal or re-installation of this product from or into any installation. Kramer Electronics will not be responsible for any costs related to any setting up this product, any adjustment of user controls or any programming required for a specific installation of this product.

How to Obtain a Remedy under this Limited Warranty

To obtain a remedy under this limited warranty, you must contact either the authorized Kramer Electronics reseller from whom you purchased this product or the Kramer Electronics office nearest you. For a list of authorized Kramer Electronics resellers and/or Kramer Electronics authorized service providers, please visit our web site at www.kramerelectronics.com or contact the Kramer Electronics office nearest you.

In order to pursue any remedy under this limited warranty, you must possess an original, dated receipt as proof of purchase from an authorized Kramer Electronics reseller. If this product is returned under this limited warranty, a return authorization number, obtained from Kramer Electronics, will be required. You may also be directed to an authorized reseller or a person authorized by Kramer Electronics to repair the product.

If it is decided that this product should be returned directly to Kramer Electronics, this product should be properly packed, preferably in the original carton, for shipping. Cartons not bearing a return authorization number will be refused.

Limitation on Liability

THE MAXIMUM LIABILITY OF KRAMER ELECTRONICS UNDER THIS LIMITED WARRANTY SHALL NOT EXCEED THE ACTUAL PURCHASE PRICE PAID FOR THE PRODUCT. TO THE MAXIMUM EXTENT PERMITTED BY LAW, KRAMER ELECTRONICS IS NOT RESPONSIBLE FOR DIRECT, SPECIAL, INCIDENTAL OR CONSEQUENTIAL DAMAGES RESULTING FROM ANY BREACH OF WARRANTY OR CONDITION, OR UNDER ANY OTHER LEGAL THEORY. Some countries, districts or states do not allow the exclusion or limitation of relief, special, incidental, consequential or indirect damages, or the limitation of liability to specified amounts, so the above limitations or exclusions may not apply to you.

Exclusive Remedy

TO THE MAXIMUM EXTENT PERMITTED BY LAW, THIS LIMITED WARRANTY AND THE REMEDIES SET FORTH ABOVE ARE EXCLUSIVE AND IN LIEU OF ALL OTHER WARRANTIES, REMEDIES AND CONDITIONS, WHETHER ORAL OR WRITTEN, EXPRESS OR IMPLIED. TO THE MAXIMUM EXTENT PERMITTED BY LAW, KRAMER ELECTRONICS SPECIFICALLY DISCLAIMS ANY AND ALL IMPLIED WARRANTIES, INCLUDING, WITHOUT LIMITATION, WARRANTIES OF MERCHANTABILITY AND FITNESS FOR A PARTICULAR PURPOSE. IF KRAMER ELECTRONICS CANNOT LAWFULLY DISCLAIM OR EXCLUDE IMPLIED WARRANTIES UNDER APPLICABLE LAW, THEN ALL IMPLIED WARRANTIES COVERING THIS PRODUCT, INCLUDING WARRANTIES OF MERCHANTABILITY AND FITNESS FOR A PARTICULAR PURPOSE, SHALL APPLY TO THIS PRODUCT AS PROVIDED UNDER APPICABLE LAW.

IF ANY PRODUCT TO WHICH THIS LIMITED WARRANTY APPLIES IS A “CONSUMER PRODUCT” UNDER THE MAGNUSON-MOSS WARRANTY ACT (15 U.S.C.A. §2301, ET SEQ.) OR OTHER APPICABLE LAW, THE FOREGOING DISCLAIMER OF IMPLIED WARRANTIES SHALL NOT APPLY TO YOU, AND ALL IMPLIED WARRANTIES ON THIS PRODUCT, INCLUDING WARRANTIES OF MERCHANTABILITY AND FITNESS FOR THE PARTICULAR PURPOSE, SHALL APPLY AS PROVIDED UNDER APPLICABLE LAW.

Other Conditions

This limited warranty gives you specific legal rights, and you may have other rights which vary from country to country or state to state.

This limited warranty is void if (i) the label bearing the serial number of this product has been removed or defaced, (ii) the product is not distributed by Kramer Electronics or (iii) this product is not purchased from an authorized Kramer Electronics reseller. If you are unsure whether a reseller is an authorized Kramer Electronics reseller, please visit our Web site at www.kramerelectronics.com or contact a Kramer Electronics office from the list at the end of this document.

Your rights under this limited warranty are not diminished if you do not complete and return the product registration form or complete and submit the online product registration form. Kramer Electronics thanks you for purchasing a Kramer Electronics product. We hope it will give you years of satisfaction.

For the latest information on our products and a list of Kramer distributors, visit our Web site where updates to this user manual may be found.

We welcome your questions, comments, and feedback.
Web site: www.kramerelectronics.com
E-mail: info@kramerel.com

SAFETY WARNING
Disconnect the unit from the power supply before opening and servicing

P/N: 2900-300283 Rev: 2