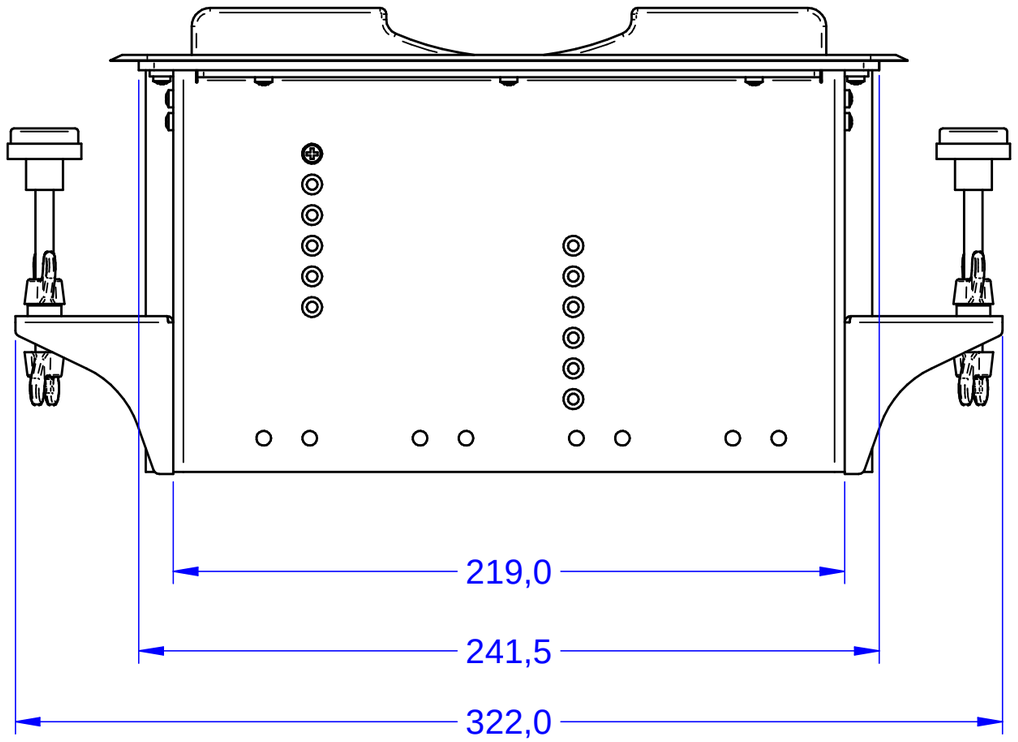
219,0
241,5
322,0

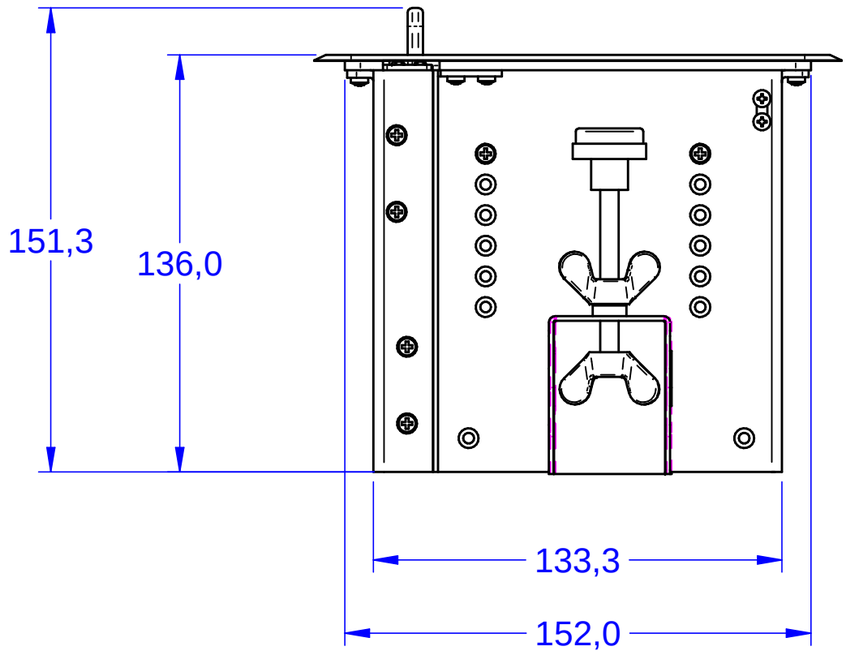
151,3
136,0
133,3
152,0

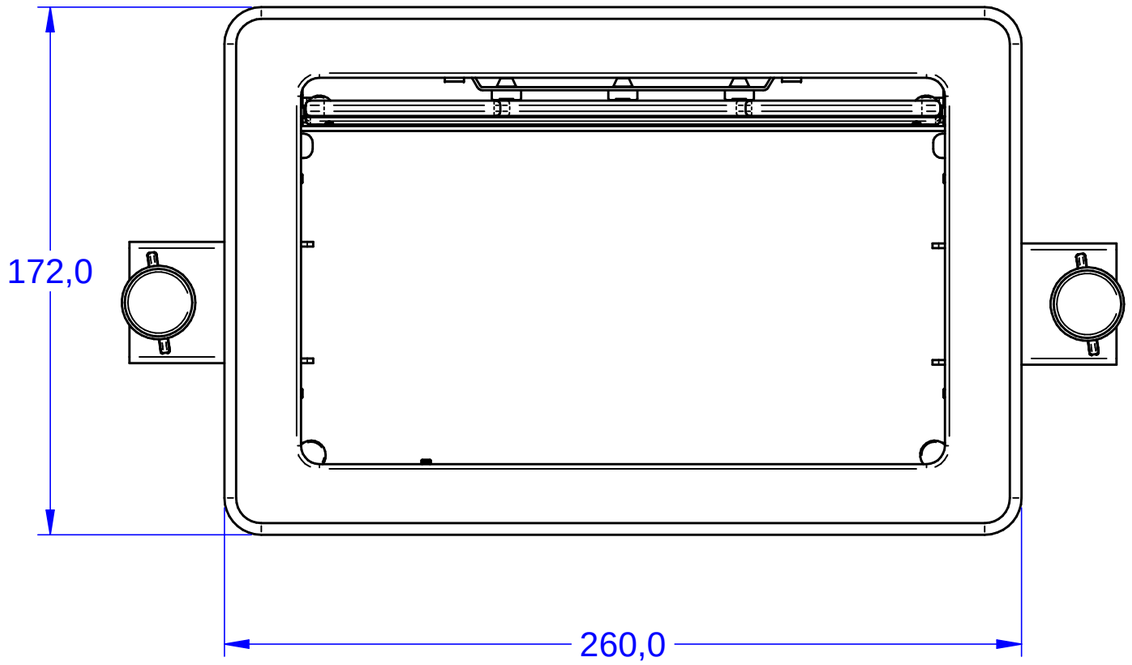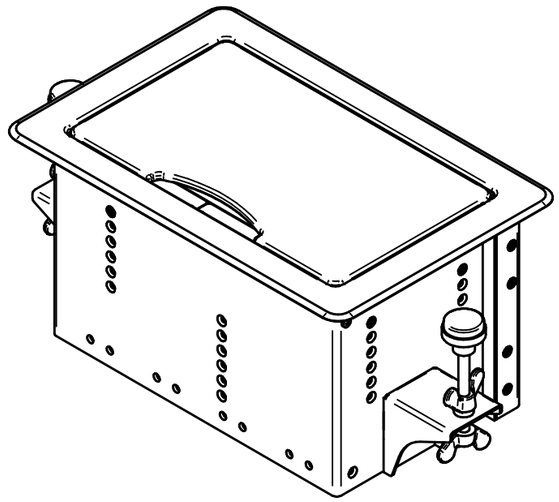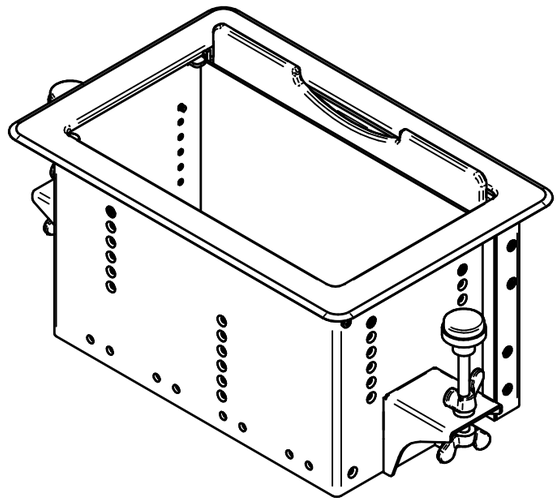
172,0
260,0